ROSE 1/2"

Wall mounted handle 1/2" NPT
Ref # 09706730

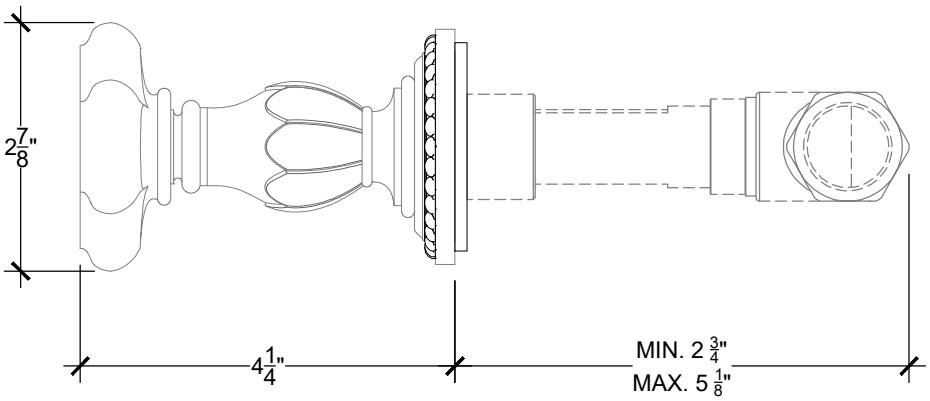

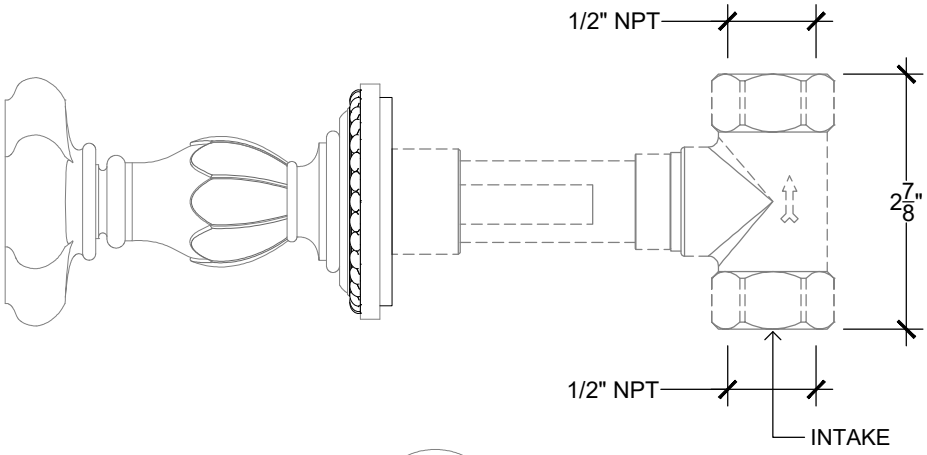

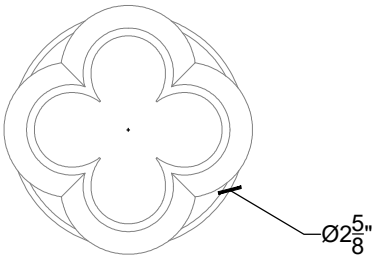

Copyright © Compas 2010 www.compasstone.com

COMPAS™

Revised 03-21-2022