CRUCIFORM

Cruciform Internal thermostatic shower system, Segovia shower arm with 8" shower head and Segovia hand held on cradle.
Système de douche mural interne avec levier Cruciform, Bras de douche Segovia avec tête de douche 8"
Ref: # 94-085

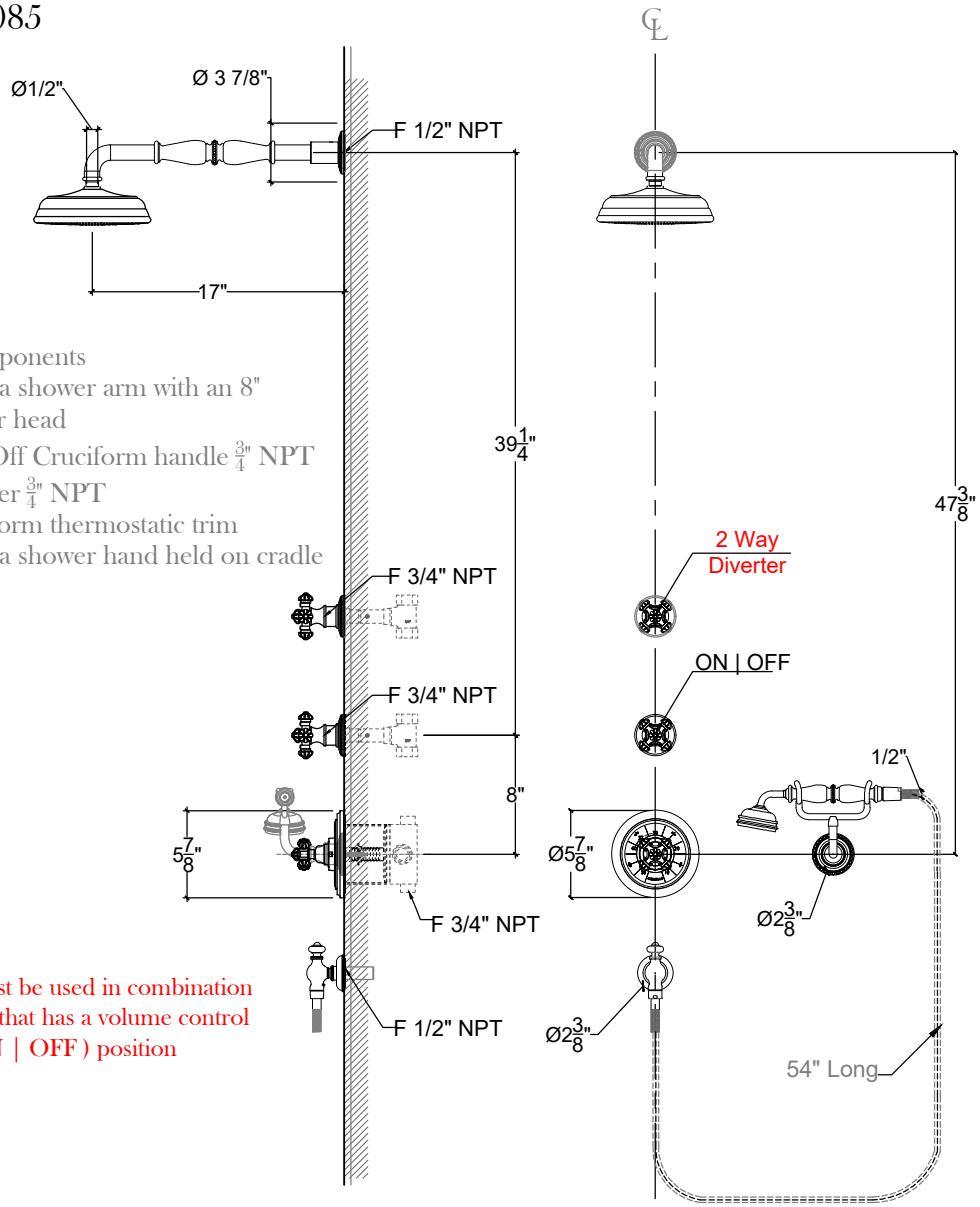

Shower Components
- Segovia shower arm with an 8" shower head
- On / Off Cruciform handle $\frac{3}{4}$" NPT
- Diverter $\frac{3}{4}$" NPT
- Cruciform thermostatic trim
- Segovia shower hand held on cradle

Diverter must be used in combination with a valve that has a volume control (ON | OFF) position

*Shower System Available for Cruciform, Tudor, & Segovia Handles

Copyright © Compas 2010 www.compasstone.com

COMPAS™