ELEGANCE

Wall Mounted Elegance Hand Held on Hook - 1/2" NPT
Montage mural - Ensemble douchette Elegance sur crochet - 1/2" NPT
Ref # 06006333

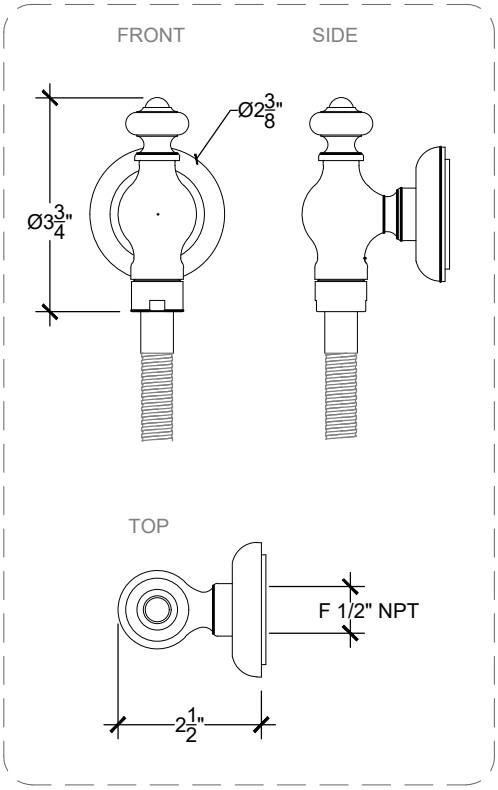

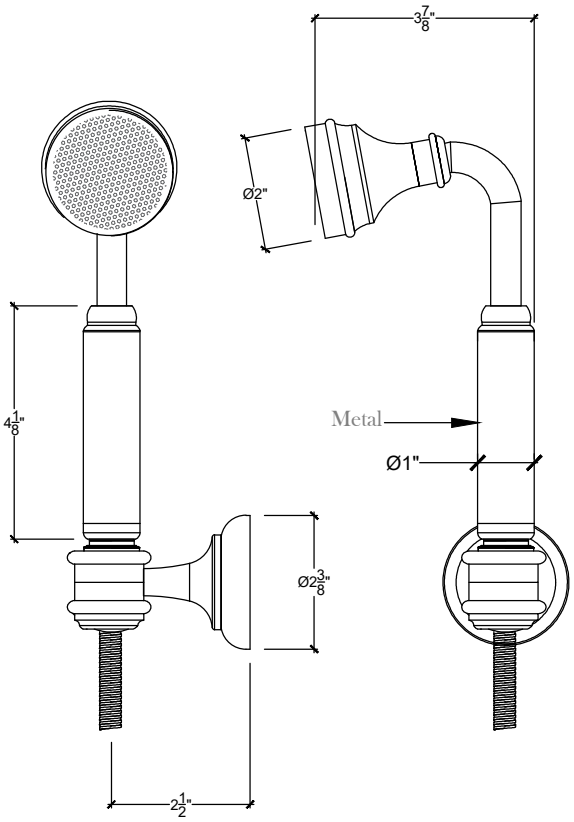

*Requires a Thermostatic Mixer

Copyright © Compas 2010 www.compassstone.com

COMPAS™

Product Support + 310 854 3023

REVISED 02-22-2022