ELEGANCE

Deck Mounted Bell Spray 1/2" NPT
Ref # 6006218

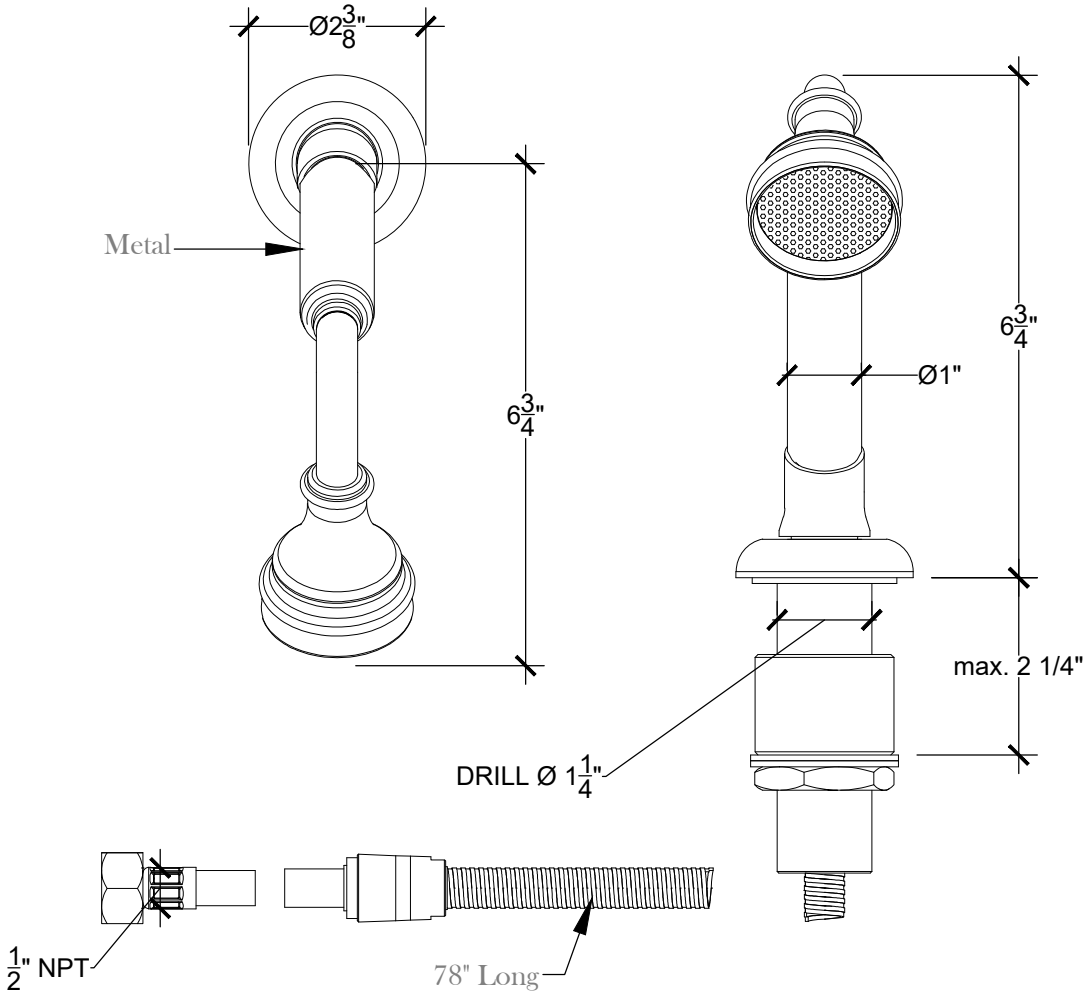

Copyright © Compas 2010 www.compassstone.com

COMPAS™

Product Support + 310 854 3023

REVISED 02-22-2022