DAISY SHOWER DRAIN

Daisy Shower Drain.
Drain daisy pour douche
Style # 08001750

HATCH LEGEND:

= Supplied by COMPAS

= Supplied by Others

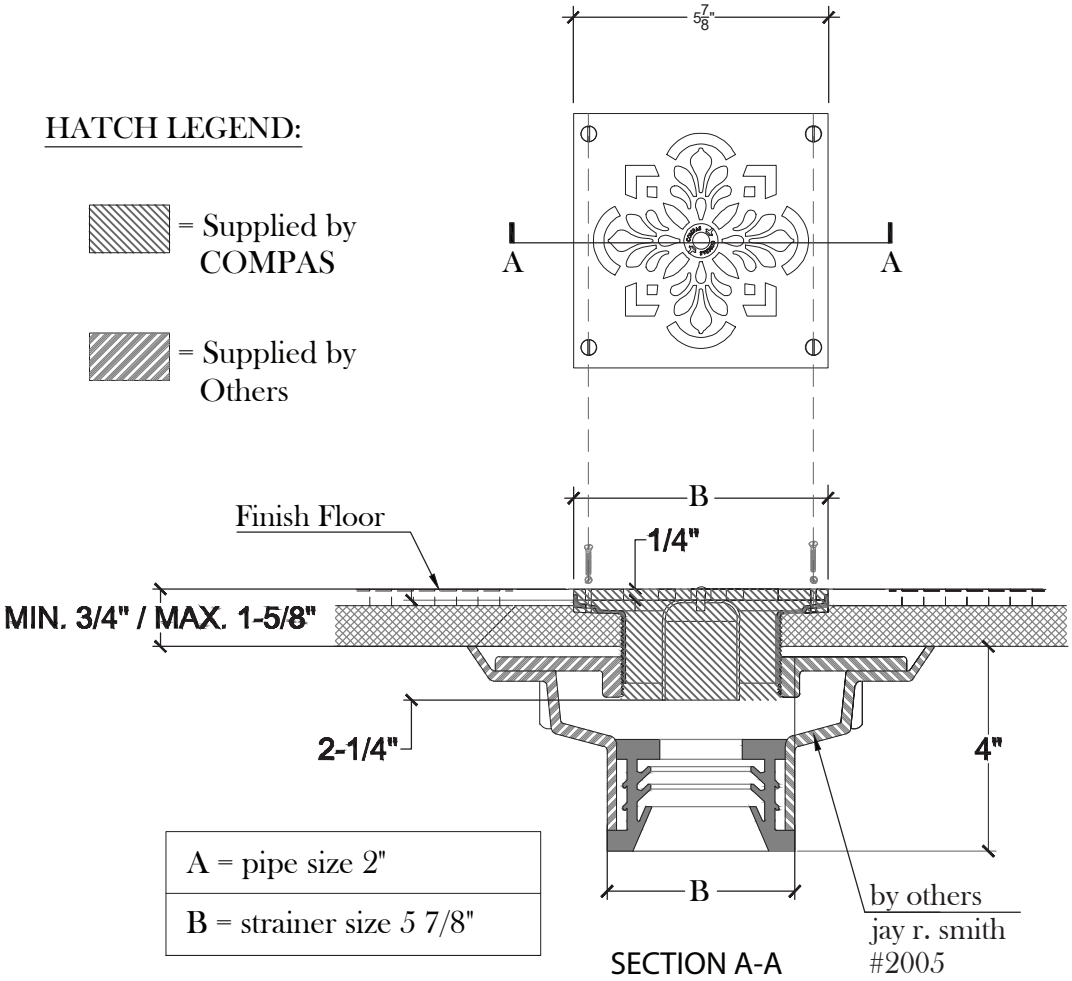

A = pipe size 2"
B = strainer size 5 7/8"

Copyright ©ompas 2010C www.compasstone.com

COMPAS™