QUADROLOBE

Quadrolobe Wall Mounted Handle for Tub / Shower - 3/4" NPT
Facade murale encastree - 3/4" NPT
Ref# 02106735

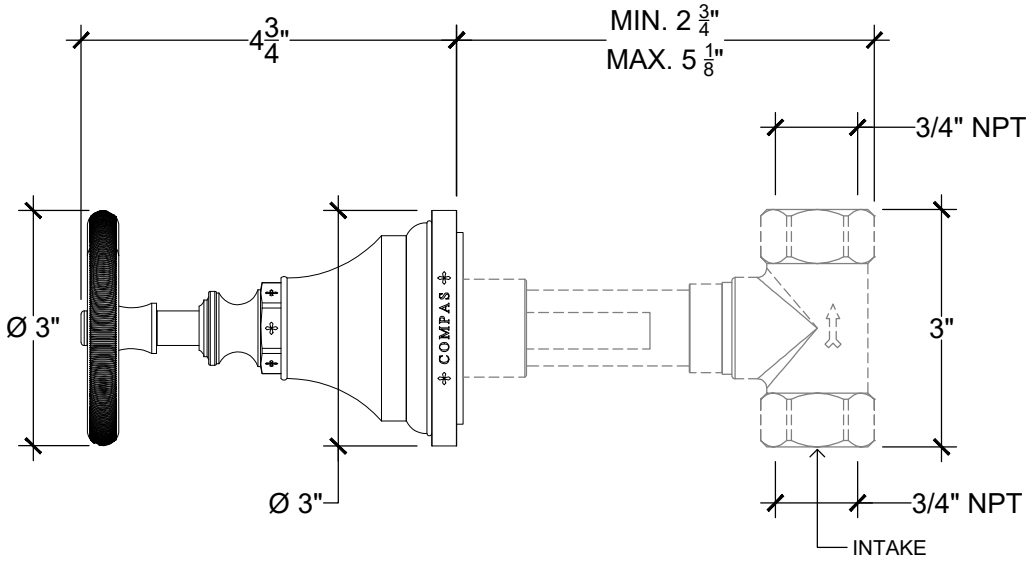

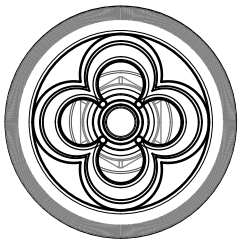

* Also Available in ½" NPT

Copyright © Compas 2010 www.compasstone.com

COMPAS™