MARGOT 1/2"

Deck mounted handle 1/2" NPT
Ref # 012006720

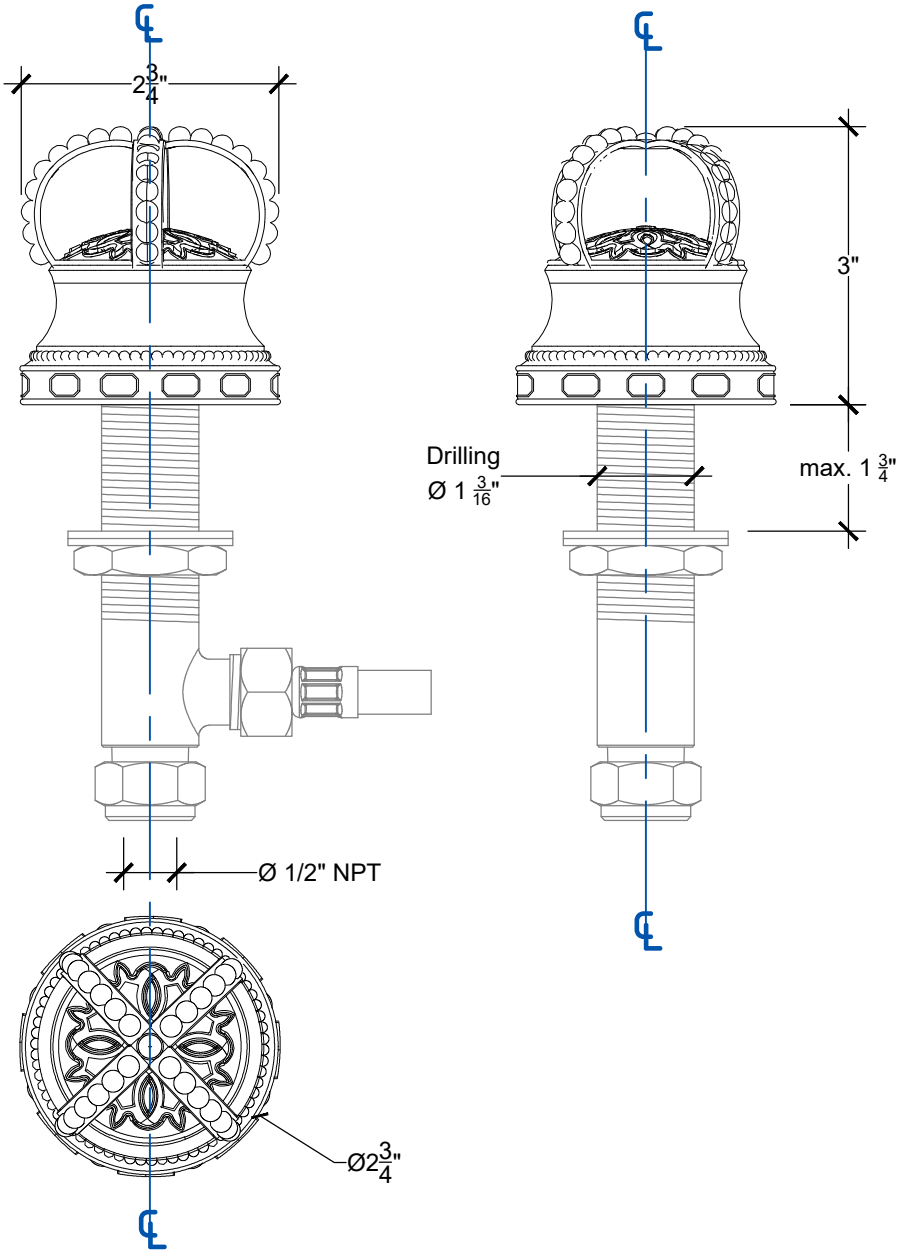

Copyright © Compas 2010 www.compassstone.com

COMPAS

Revised 03-14-2022