GOLDRON

Goldron Wall Mounted Handle for Tub/Shower - 3/4" NPT
Arret murale - 3/4" NPT
Right Handle Lever Style # 11906735
Left Handle Lever Style # 11906736

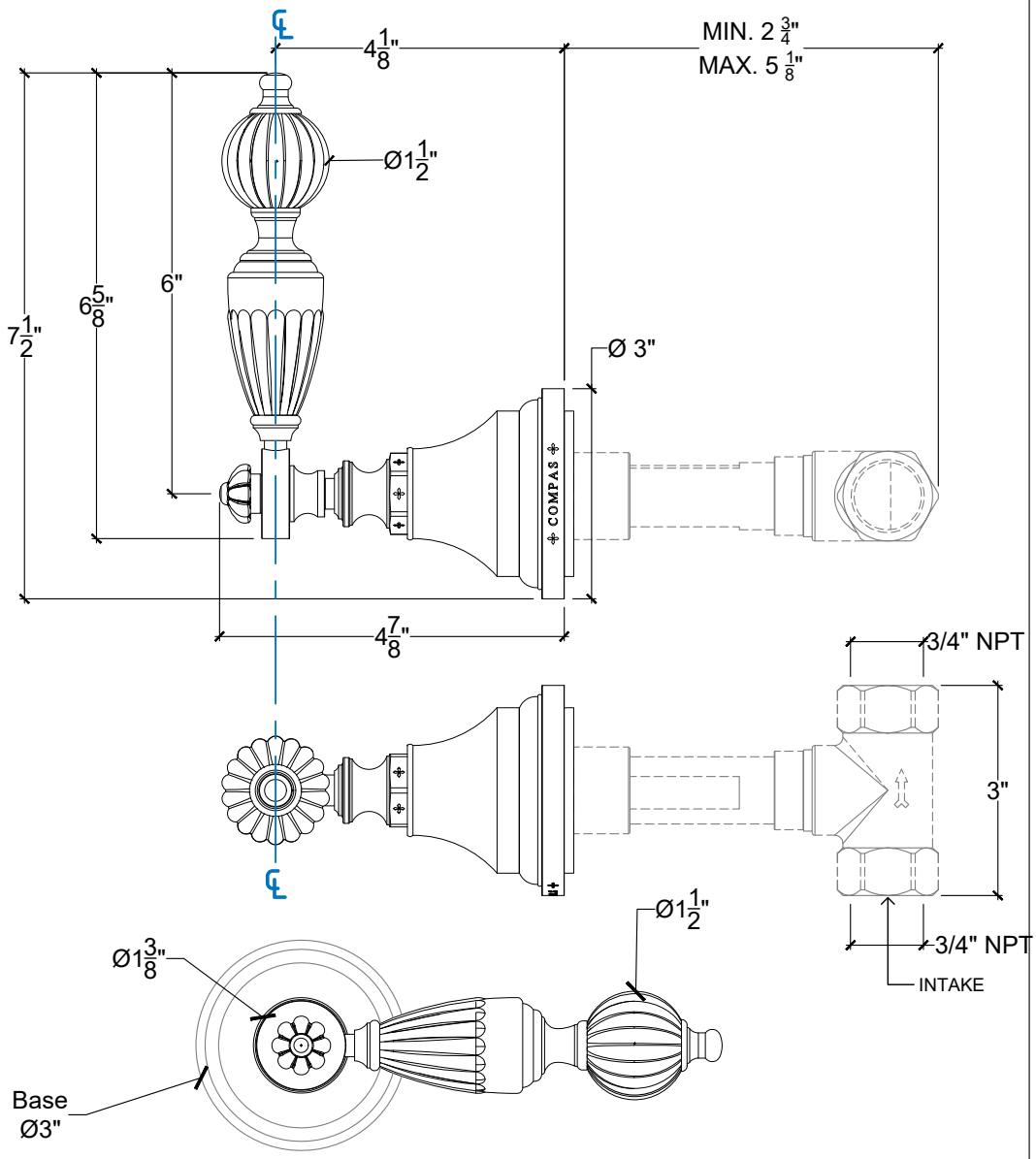

Copyright Compas 2010 www.compasstone.com

COMPAS™

Product Support +1 310 854 3023

REVISED 03-19-20

Technical Drawings are subject to change at Compas' discretion.