CLASSIQUE

Classique Deck Mounted Handles _ 1/2" NPT
Style # 06006720

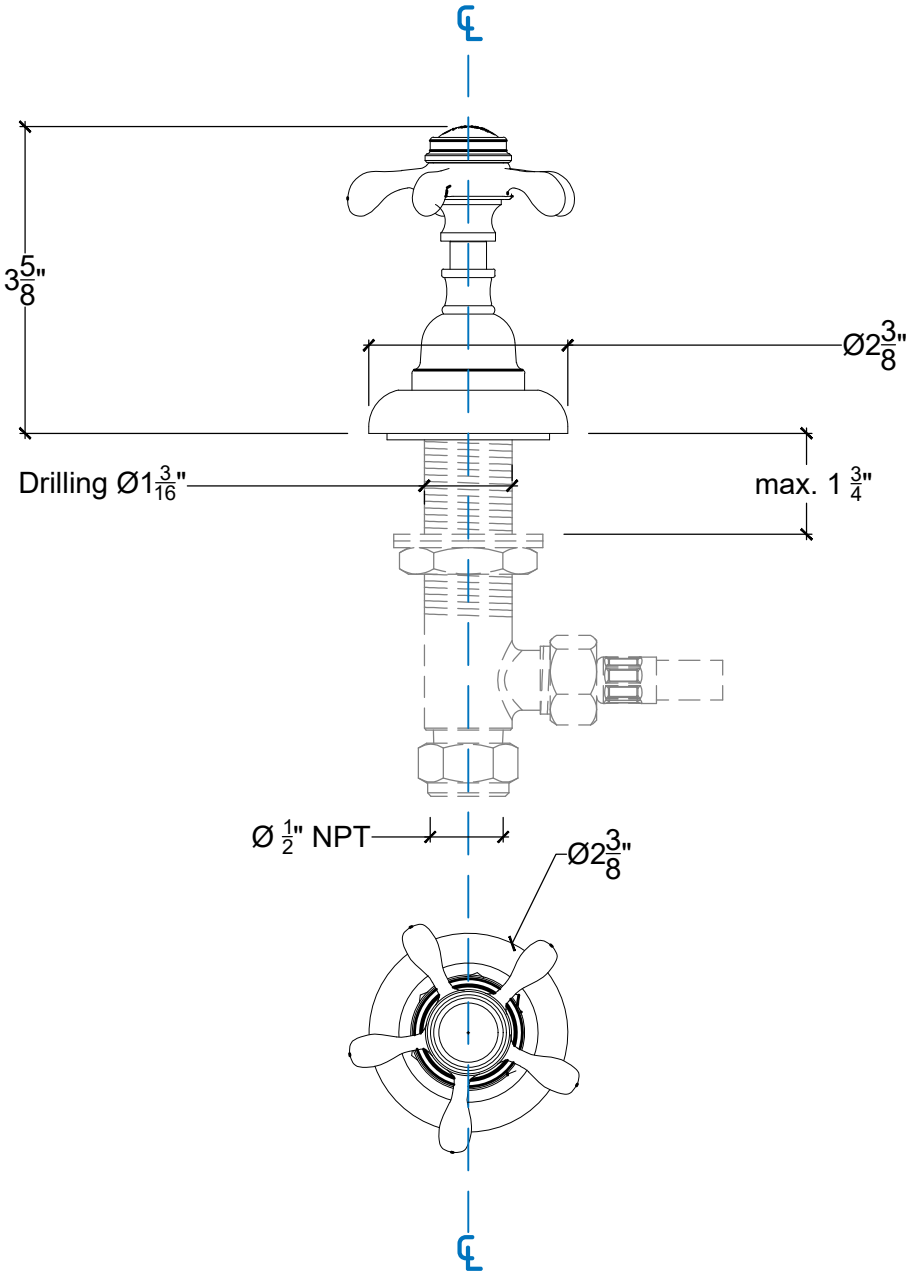

Copyright © Compas 2010 www.compasstone.com

COMPAS

REVISED 12-17-19

CLASSIQUE

Classique Deck Mounted Tub/ Shower Handles _ 3/4" NPT

Style # 06006725

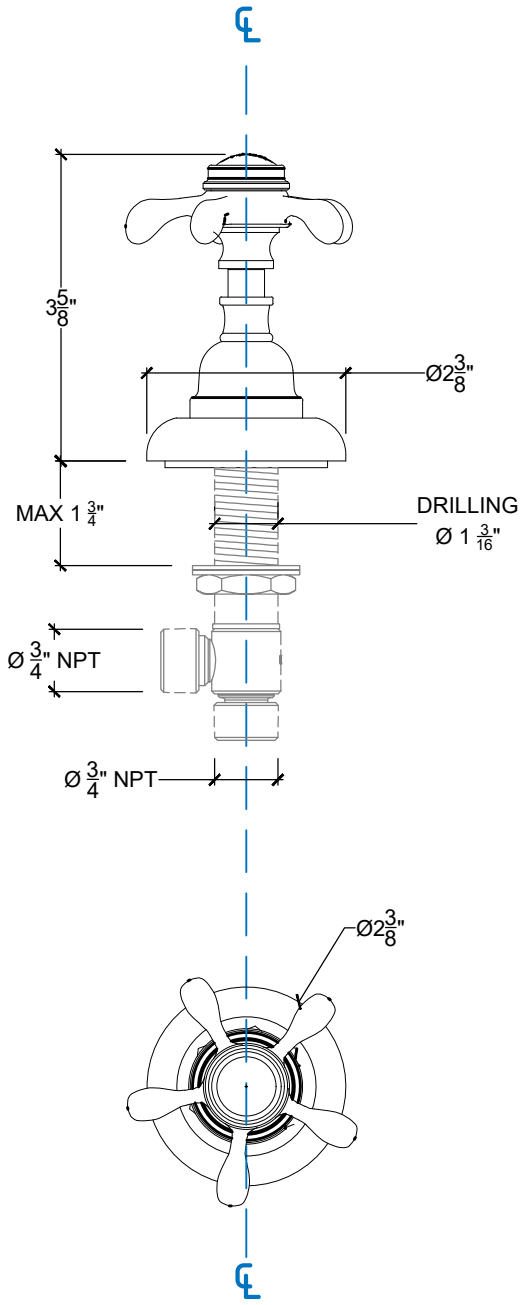

Copyright © Compas 2010 www.compasstone.com

COMPAS

REVISED 12-17-19

ETOILES

Classique Deck Mounted Handle_ $\frac{1}{2}$" NPT

Style # 0600ET6720

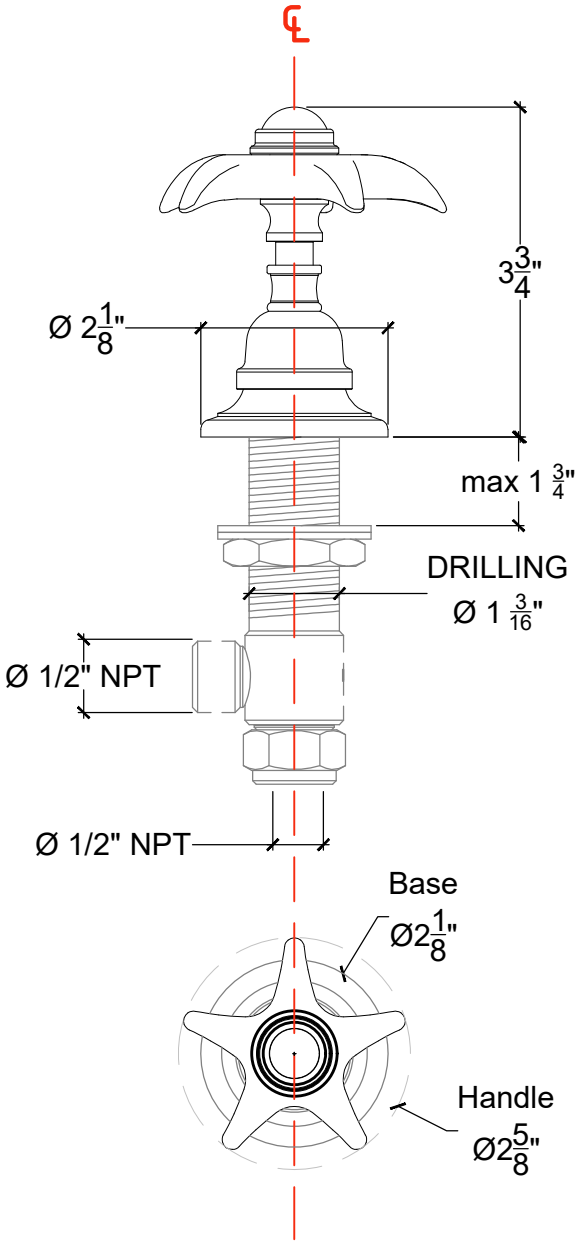

COMPAS

REVISED 05-20-19

ETOILES

Classique Deck Mounted Handle _ 3/4" NPT

Style # 0600ET6725

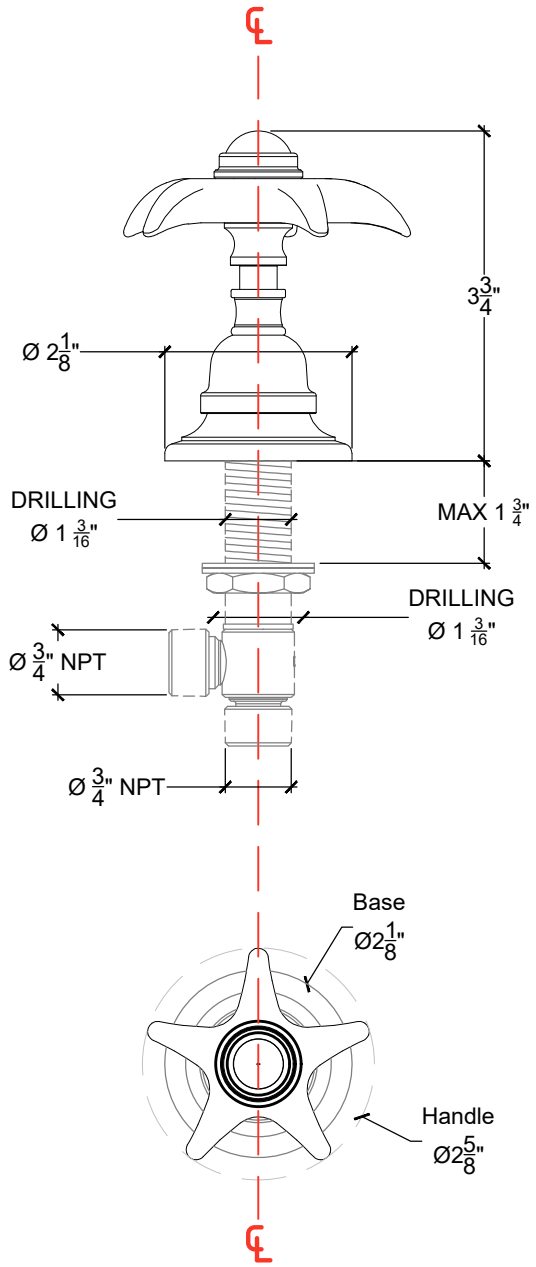

COMPAS

REVISED 06-25-19

GOUTTES D'EAU DM

CLASSIQUE DECK MOUNTED HANDLE _ $\frac{1}{2}$" NPT

Style # 0600GD6720

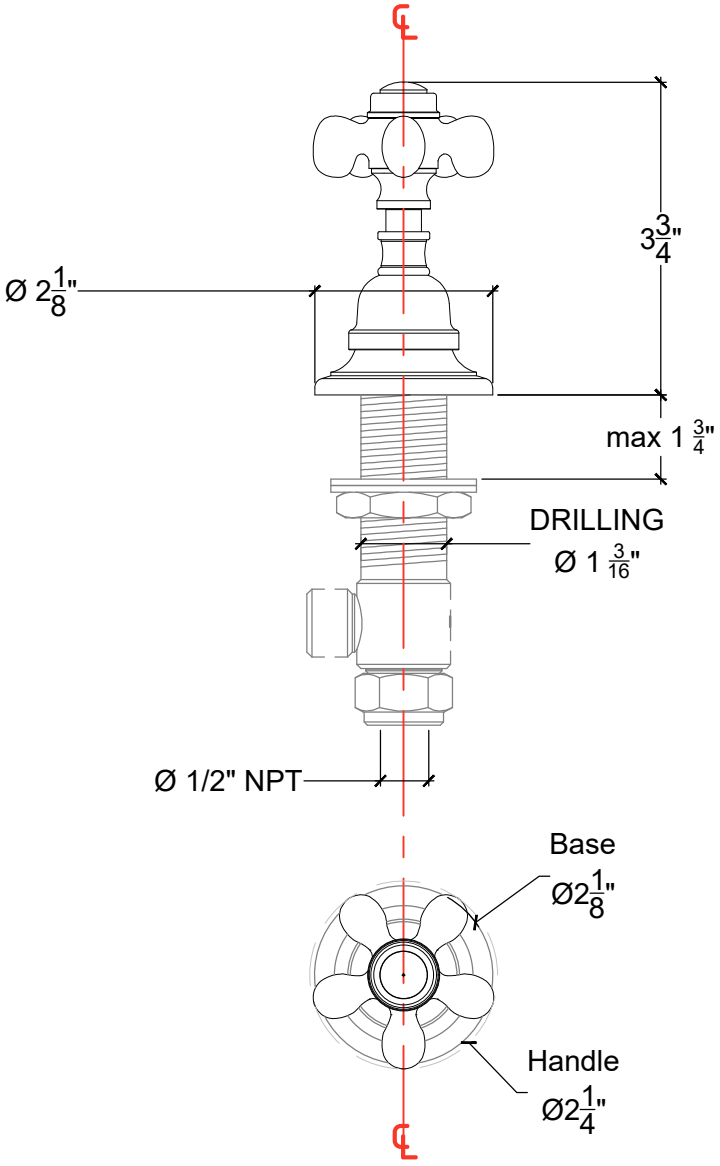

Copyright © Compas 2010 www.compassstone.com

COMPAS

REVISED 05-20-19

GOUTTES D'EAU DM

CLASSIQUE DECK MOUNTED HANDLE _ 3/4" NPT

Style # 0600GD6725

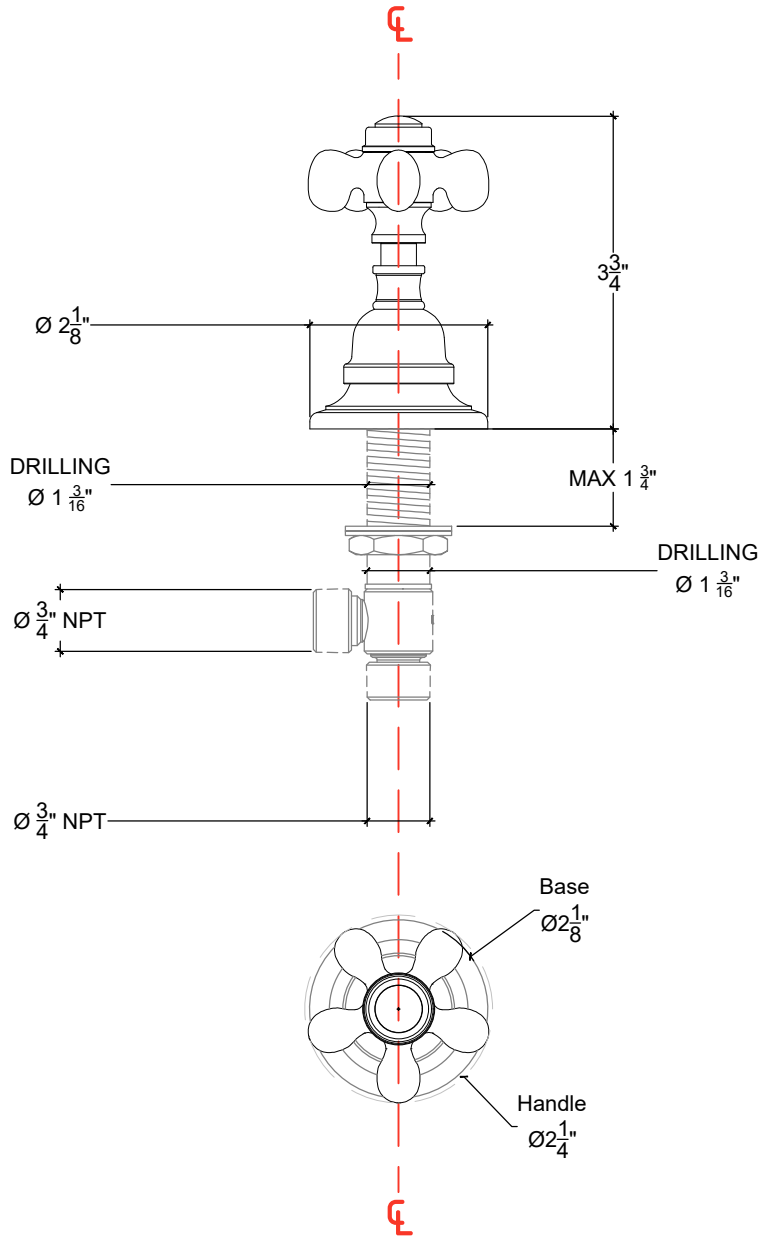

Copyright © Compas 2010 www.compasstone.com

COMPAS

REVISED 06-25-19

MARINE

Marine Deck Mounted handle with metal bulbs $\frac{1}{2}$" NPT
Style # 03806720

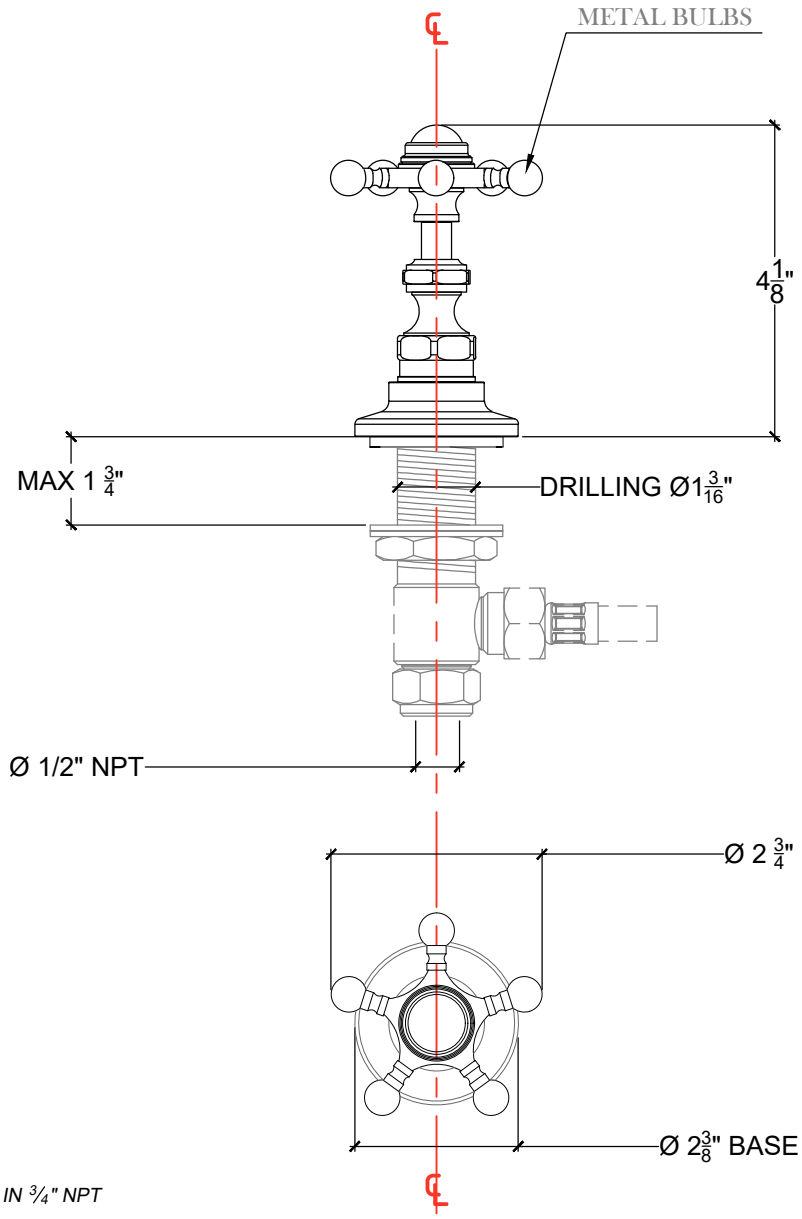

** AVAILABLE IN ¾" NPT*

Copyright © Compas 2010 www.compasstone.com

COMPAS

MARINE

Marine Deck Mounted handle with metal bulbs 3/4" NPT

Style # 03806725

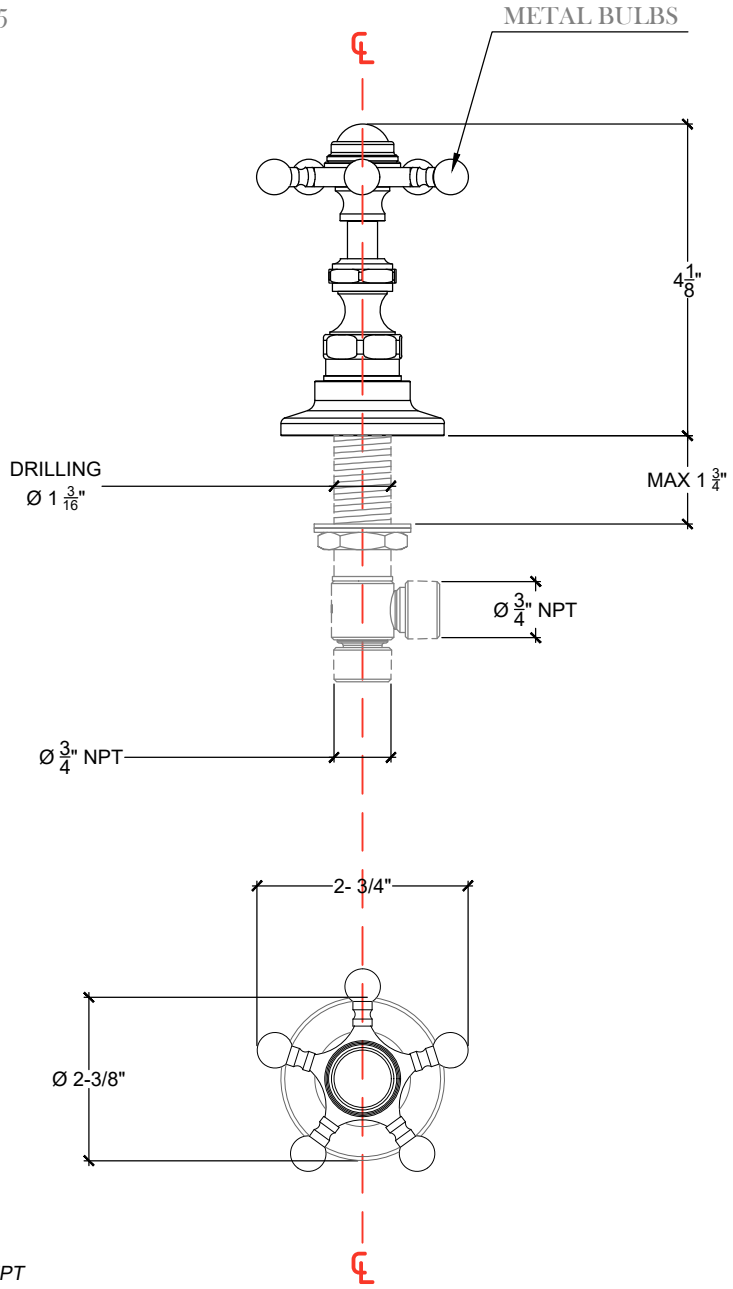

** AVAILABLE IN ½" NPT*

Copyright © Compas 2010 www.compasstone.com

COMPAS

MEDUSE

Meduse Deck Mounted Handle _ 1/2" NPT

Style # 07206720

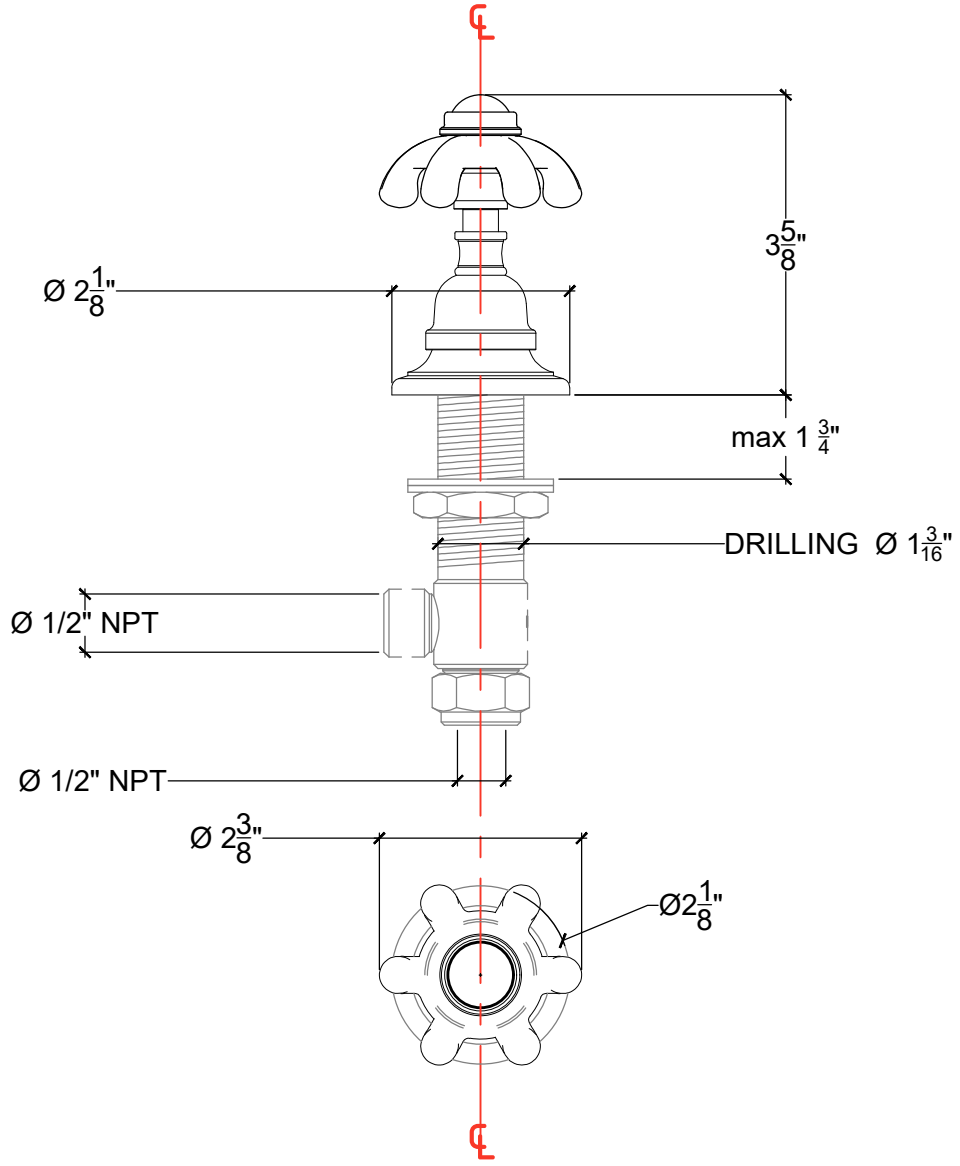

Copyright © Compas 2010 www.compasstone.com

COMPAS

REVISED 05-20-19

MEDUSE

Meduse Deck Mounted Handle _ 3/4" NPT

Style # 07206725

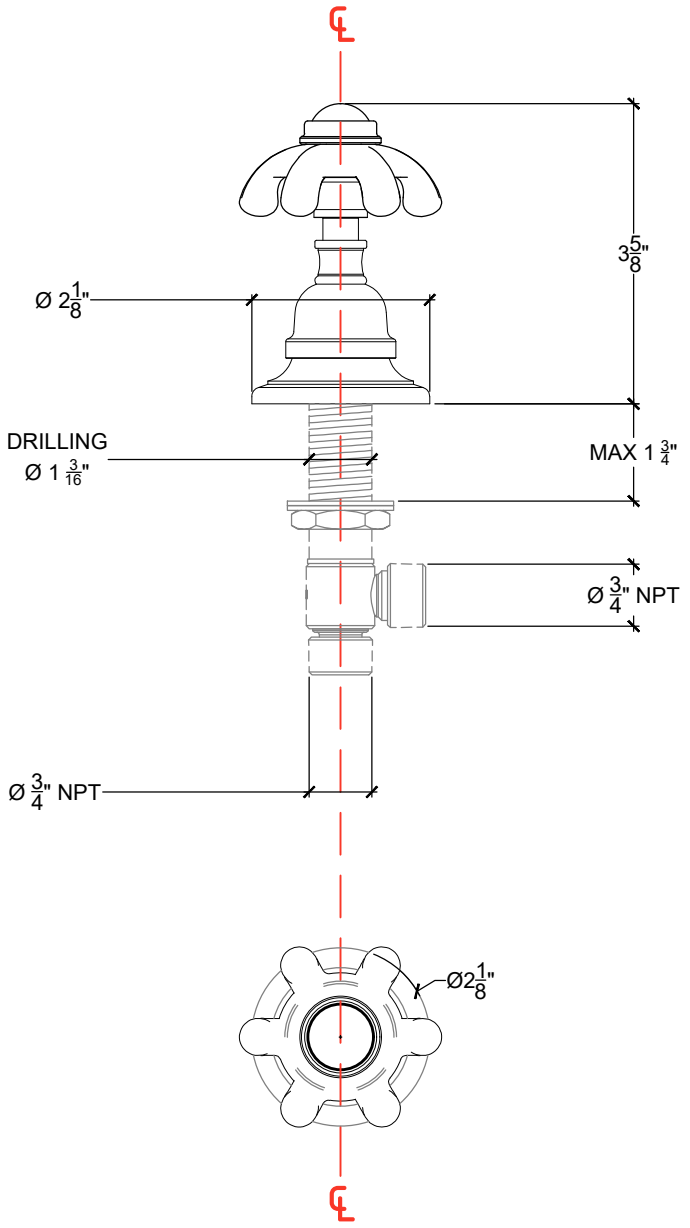

Copyright © Compas 2010 www.compasstone.com

COMPAS

REVISED 06-25-19